Information

The MGW/920 can be delivered optional with an integrated M-Bus Master-Interface. The M-Bus (Metering Bus) is a field bus for collecting consumption data. The transfer takes place serially on a reverse polarity protected two-wire line between the connected slaves (measuring equipment - normally consumption meters) and exactly one master. This master reads each meter via the M-Bus. The power supply for the meters can take place via the M-Bus also.

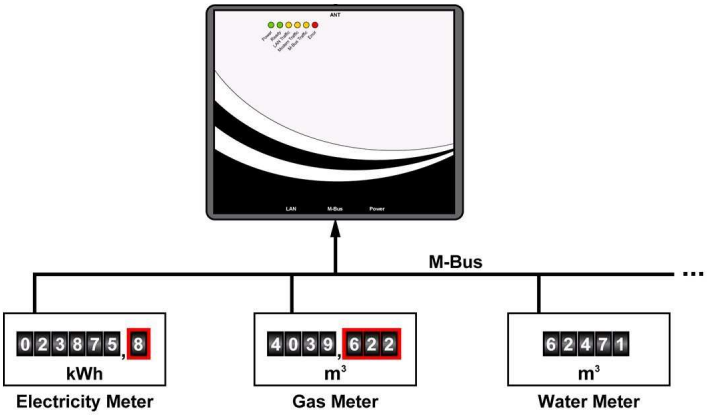

The following picture shows the block diagram of the M-Bus master interface for the MGW/920:

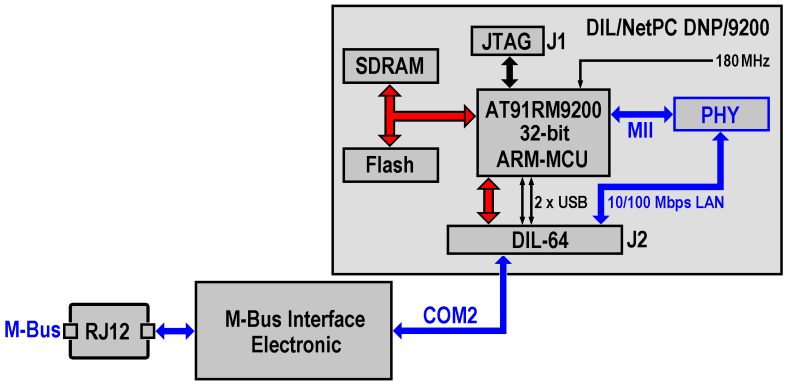

Physically the M-Bus is available at the RJ12 connector of the MGW/920. At this M-Bus up to ten external meters can be connected as slaves who also receive power via the MGW/920.

The maximum dimension of the M-Bus network can be up to 10.000 meter. Internally the RJ12 M-Bus connector is linked to the serial COM2-interface (the name for this interface within the Linux is ***/dev/ttyS1***) of the DIL/NetPC DNP/9200, which is the internal 32-bit Linux core module of the MGW/920.

In the Linux subdirectory */flash/mbus* of the MGW/920 is an M-Bus sample is preinstalled. Setup a Telnet-based session on the MGW/920.

Please log in with the user name ***root.*** A password is not necessary for this username, as long as the default settings are used.

```
Telnet 192.168.0.126
- SSV Embedded Linux - Version 0.62.26

emblinux login: root
Password:
[root@emblinux /root]$cd /flash/mbus
[root@emblinux mbus]$ls -al
drwxr-x---    2 root     root            0 Jan  1 12:00 .
drwxr-xr-x    6 root     root            0 Jan  1 00:00 ..
-rw-r--r--    1 root     root          589 Mar 18  2008 plant.config
-rw-r--r--    1 root     root          952 Mar 18  2008 plant.config.lab
-rwxr-xr-x    1 root     root        91819 Mar 18  2008 read_mbus
-rwxr-xr-x    1 root     root        69147 Mar 18  2008 read_meter
[root@emblinux mbus]$_
```

Then branch in the subdirectory */flash/mbus* and start the M-Bus sample application *read_mbus*:

```
cd /flash/mbus
./read_mbus /dev/ttyS1
```

```
Telnet 192.168.0.126
[root@emblinux mbus]$./read_mbus /dev/ttyS1
set_com_uart_mode:mbus no hnadshake 2400 8E1
Initialize network ...
TEST2
Read Elster F4
Select meter
WRITE:
[68]
[0b][0b][68][53][fd][52][78][75][12][00][ff][ff][ff][ff][9d][16][e5]
{e5}
Send data request cmd
_
```

This sample program accesses to the M-Bus for reading the data of the connected meter and showing them in the Telnet window.

```
Telnet 192.168.0.126
{12}[00]{00}[05]{05}[1f]{1f}[03]{03}[02]{02}[ff]{ff}[0f]{0f}[05]{05}[3c]{3c}[63]
{63}[65]{65}[a1]{a1}[65]{65}[a0]{a0}[06]{06}[ca]{ca}[06]{06}[04]{04}[00]{00}[f0]
{f0}[4b]{4b}[1b]{1b}[01]{01}[a0]{a0}[05]{05}[63]{63}[33]{33}[83]{83}[16]{16}ok
Type: Long frame
C-Field: 08
A-Field: 02
ID:         127578
Vendor:     4ecd
medium:     04
generation: 09
signature:  0000
a_count:    181
state:      70
DIF: 04 VIF: 06 UINT32 VALUE: 0
DIF: 04 VIF: 13 UINT32 VALUE: 0
DIF: 84 ->EB DIFE: 40 VIF: 13 UINT32 VALUE: 0
DIF: 02 VIF: 5b UINT16 VALUE: 242
DIF: 02 VIF: 5f UINT16 VALUE: 24
DIF: 02 VIF: 62 UINT16 VALUE: 2185
DIF: 04 VIF: 22 UINT32 VALUE: 59543
DIF: 04 VIF: 26 UINT32 VALUE: 43324
DIF: 04 VIF: 3b UINT32 VALUE: 0
DIF: 04 VIF: 2c UINT32 VALUE: 0
DIF: 04 VIF: 6d UINT32 VALUE: 370871552
DIF: 84 ->EB DIFE: 40 VIF: 6e UINT32 VALUE: 0
DIF: 84 ->EB DIFE: 80 ->EB DIFE: 40 VIF: 6e UINT32 VALUE: 0
DIF: 1f VIF: e8 ->EB VIFE: 03 VALUE: 0
DIF: 01 VIF: 08 UINT8 VALUE: 11
DIF: 00 VIF: 01 VALUE: 0
DIF: 01 VIF: 00 UINT8 VALUE: 0
DIF: 78 VIF: 75 SELECT VALUE: 0
DIF: 12 VIF: 00 UINT16 VALUE: 20173
DIF: 09 VIF: 04 BCD2 VALUE: 7
DIF: af ->EB DIFE: ff ->EB DIFE: 03 VIF: 78 VALUE: 7
DIF: 75 VIF: 12 REAL32 VALUE: 52364544
DIF: 02 VIF: ff ->EB VIFE: 0f UINT16 VALUE: 15365
DIF: 63 VIF: 65 UINT24 VALUE: 10511777
DIF: 06 VIF: ca ->EB VIFE: 06 UINT48 VALUE: 1274019844
DIF: a0 ->EB DIFE: 05 VIF: 63 VALUE: 0
DIF: 33 VIF: 83 ->EB VIFE: 16 UINT24 VALUE: 0
Close file
[root@emblinux mbus]$
```

Further details of the M-Bus protocol can be found at [1]. For connecting a special M-Bus meter to the MGW/920, please approach to our application support.

Reference:

[1] Description of the M-Bus protocol: http://www.m-bus.com/